ISO 9001
ISO14001

LRQA CERTIFIED
ISO 9001 · ISO 14001

Manufacturer
TLV CO., LTD.
Kakogawa, Japan
is approved by LRQA Ltd. to ISO 9001/14001

Instruction Manual

(Information for Use in Hazardous Locations)

iTrapSensor Monitoring System
Surface Temperature/Ultrasound Sensor: iT5-IS-SUN
(ATEX/IECEx/UKEX-certified Model)

172-65797MA-00
Publication date 31 January 2024
Copyright © 2024 TLV CO., LTD.

Table of Contents

Introduction 3
Safety Considerations 4
Conditions of safe use (Information for use in hazardous locations) 7
Part Names 8
Installation 9
Mounting Position 11
Replacing the Battery Pack 12
Installing the Sun Shade 14
Installing the Antenna Extension 17
Calibration 18
Specifications 19
TLV EXPRESS LIMITED WARRANTY 24
Service 26

Introduction

Thank you for purchasing the TLV iT5 monitoring system.

This product has been thoroughly inspected before being shipped from the factory. When the product is delivered, before doing anything else, check the specifications and external appearance to make sure nothing is out of the ordinary. Also be sure to read this manual carefully before use and follow the instructions to be sure of using the product properly.

To ensure safe and correct use of this product, be sure to observe the safety precautions listed in this manual as they relate to installation, operation, maintenance and repair of the product. Please keep it in a safe place for future reference.

TLV accepts no responsibility for incorrect use of the product by the customer or any third-party, malfunction occurring during use, other defects and any damage caused by this product, excluding cases in which it is under obligation to pay reparations by law.

This product has undergone strict quality management and product inspection before being shipped from the factory. However, in the event of malfunction or defects, please contact your local TLV representative or the TLV customer service center.

This instruction manual and product are subject to modification without notice, for the purpose of improvement.

Unauthorized reprinting or reproduction, in whole or in part, of this instruction manual or contents of the hardware/software of the product is strictly prohibited.

This instruction manual contains information for use in hazardous locations. Be sure to read this instruction manual carefully before installing in hazardous locations. Please use correctly and safely.

Safety Considerations

- Read this section carefully before use and be sure to follow the instructions.
- Installation, inspection, maintenance, repairs, disassembly, adjustment and valve opening/closing should be carried out only by trained maintenance personnel.
- The precautions listed in this manual are designed to ensure safety and prevent equipment damage and personal injury. For situations that may occur as a result of erroneous handling, three different types of cautionary items are used to indicate the degree of urgency and the scale of potential damage and danger: DANGER, WARNING and CAUTION.
- The three types of cautionary items above are very important for safety: be sure to observe all of them as they relate to installation, use, maintenance and repair. Furthermore, TLV accepts no responsibility for any accidents or damage occurring as a result of failure to observe these precautions.

Cautionary items and definitions

Danger
Indicates an urgent situation which poses a threat of death or serious injury

Warning
Indicates that there is a potential threat of death or serious injury

Caution
Indicates that there is a possibility of injury or equipment/product damage

General Precautions

Danger
DO NOT disassemble or modify. Failure to observe this precaution could result in personal injury, electrocution, ignition or fire.

Danger
DO NOT use the battery pack other than that specified. Failure to observe this precaution could result in failure, ignition, or explosions.

Danger
DO NOT wipe/rub the surfaces of this product with a dry cloth etc. There is the danger of electrostatically charging the unit, which may result in ignition or explosions, especially in hazardous locations.

Danger
DO NOT use this product in hospitals or airplanes. Failure to observe this precaution could result in malfunction of medical equipment, instrumentation, etc.

Danger
Ensure the specifications for the intrinsically safe structure of this product meet the requirements for installation in hazardous locations. Specifications for the intrinsically safe structure of this product are described in the "Specifications" section.

Danger
Aluminum is used in this product. Do not expose the product to impact or friction. Exposure to impact or friction may result in ignition or accidental explosions.

Danger
When installing or working at high elevations, take measures to ensure against dropping the product or parts. Failure to take such measures could result in personal injury if persons passing below are struck by a falling object, or other accidents.

Danger
Check to make sure that no wireless instrumentation other than the product is being used. Failure to observe this precaution could lead to interference of important transmissions or accidents.

Danger
The equipment contains non-metallic materials and that the user should consider the performance of these materials with respect to chemicals which may be present in the hazardous area. If in doubt, please contact the manufacturer.

Warning
As this is an industrial product, it is not to be used on consumer applications nor in residential areas.

Warning
DO NOT substitute components, as this may impair the intrinsic safety of the product.

Warning
DO NOT install this product on objects exceeding maximum allowable operating temperature. Overheating could result in damage to internal parts, excessive heat generation, rupture or ignition.

Warning
DO NOT subject the unit to strong shocks or throw it against anything. Failure to observe this precaution could result in damage to internal parts, excessive heat generation, rupture, ignition or personal injury.

Warning
DO NOT place device in microwave ovens or high-pressure vessels, or in the vicinity of electromagnetic devices. Such handling could result in excessive heat generation, smoke, damage to circuitry, battery fluid leakage, rupture or ignition.

Caution
Do not allow any foreign matter to enter the unit. In areas with small foreign matter such as metal dust, use the product after taking measures to prevent foreign matter entering the unit. Failure to observe this precaution could result in fire or malfunction.

Caution
Do not let the unit become immersed in water. If liquid gets inside the unit, it may result in excessive heat generation, electrical shock or unit malfunction. Be mindful of the location of use and handling.

Battery Pack Precautions

Danger
DO NOT apply heat to the battery pack or throw it into a fire. Failure to observe this precaution could result in leakage of the battery fluid, excessive heat generation, rupture or ignition.

Danger
DO NOT disassemble, modify or solder the battery pack. Failure to observe this precaution could result in leakage of the battery fluid, excessive heat generation, rupture or ignition.

Danger
DO NOT cause the batteries to become wet by immersing in water, salt water or liquid chemicals. Failure to observe this precaution could result in leakage of the battery fluid, excessive heat generation, rupture or ignition.

Danger
DO NOT leave unit where it will be exposed to direct sunlight or in areas that will become very hot, such as interiors of cars, near heating equipment, etc. Failure to observe this precaution could result in leakage of the battery fluid, excessive heat generation, rupture or ignition.

Danger
DO NOT replace the battery pack when an explosive atmosphere is present. The battery pack is not intended to be replaced when an explosive atmosphere is present. The battery pack must be replaced when an explosive atmosphere is not present or it must be replaced in a non hazardous location.

Warning
Cease use of the battery pack immediately if the unit exhibits abnormal operation. If irregularities such as fluid leakage, an unusual smell, unusual heat generation, discoloration or deformation are noticed, cease use of the unit immediately. If use is continued under such conditions, excessive heat generation, ignition or rupture may result.

Warning
If battery fluid leaks and comes into contact with the body, rinse immediately. There is danger of resultant damage to the skin. Immediately rinse any battery fluid off with clean water.

Caution
When not intending to use for extended periods of time, remove the battery pack from the unit and store in a dry, cool, dark location. Failure to observe this precaution could result in fluid leakage, rust, deterioration in performance or a reduction in service life.

Caution
Do not dispose of the battery pack with normal garbage. If at any time the battery pack becomes unusable, observe your company regulations for proper disposal in accordance with local laws. If proper disposal is impossible, insulate the contact terminals by covering them with tape and return them to a TLV office.

Conditions of safe use (Information for use in hazardous locations)

- Under certain extreme circumstances, the non-metallic parts incorporated in the enclosure of this equipment may generate an ignition-capable level of electrostatic charge. Therefore, the equipment shall not be installed in a location where the external conditions are conducive to the build-up of electrostatic charge on such surfaces. This is particularly important if the equipment is installed in a zone 0 or Division 1 location. In addition, the equipment shall only be cleaned with a damp cloth.
- The enclosure is manufactured from aluminum alloy. In rare cases, ignition sources due to impact and friction sparks could occur. This shall be considered during installation, particularly if the equipment is installed in a zone 0 or Division 1 location.
- Maximum ambient temperature is different depending on measuring surface temperature and model type. Read ambient temperature range in specification chart carefully before use.

Part Names

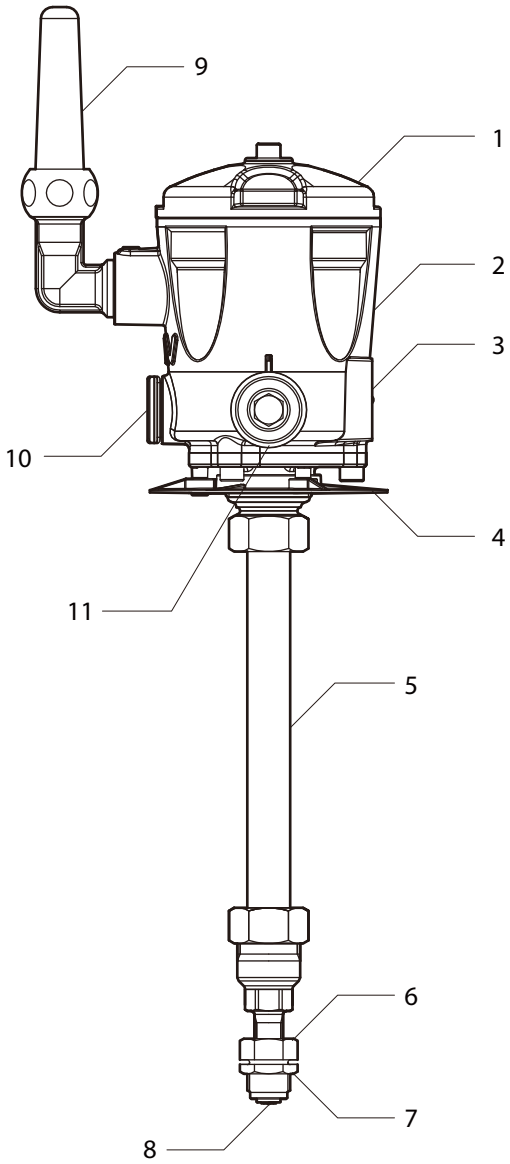

No.	Part Name	No.	Part Name
1	Sensor Cover (Aluminum)	7	Locknut (Stainless Steel)
2	Sensor Body (Aluminum)	8	Tip Section (Stainless Steel)
3	Nameplate Mounting Position	9	Antenna (Resin)
4	Heat Shield Plate (Resin)	10	Infrared Port (Resin)
5	Connecting Pipe (Stainless Steel)	11	Cover Cap (Resin)
6	Sensor Monitoring Union (Stainless Steel)		

Installation

Danger

Ensure the specifications for the intrinsically safe structure of this product meet the requirements for installation in hazardous locations. Specifications for the intrinsically safe structure of this product are described in the "Specifications" section.

Aluminum is used in this product. Do not expose the product to impact or friction. Exposure to impact or friction may result in ignition or accidental explosions.

Do not wipe/rub the surfaces of this product with a dry cloth etc. There is the danger of electrostatically charging the unit, which may result in ignition or explosions, especially in hazardous locations.

The equipment contains non-metallic materials and that the user should consider the performance of these materials with respect to chemicals which may be present in the hazardous area. If in doubt, please contact the manufacturer.

Note

Install in accordance with National Electric Code, Canadian Electrical Code or other applicable Local Codes.

Installing the sensor on iTrap

1. Remove the plug from the sensor mounting seat on the iTrap body or sensor mounting socket.
2. Place the sensor mounting union into the sensor mounting seat and tighten it to the proper torque. (Torque: 20 N·m (15 lbf·ft))
   - Check the base of the sensor mounting seat, and remove any dirt or foreign matter if present.
   - Lift the locknut as far as possible while placing the sensor tip into the seat, then tighten the sensor mounting union.
     If the locknut is not lifted properly, the tip of the sensor (the sensing part) may not touch the base of the sensor mounting seat.
3. Tighten the locknut, making sure it is firmly secured.

Installing the sensor on non-iTraps

1. Temporarily secure the mounting bracket to the inlet side of the trap.

2. Screw the sensor tip into the threaded portion of the mounting bracket and adjust the installation height.

3. Secure the mounting bracket by tightening the clamp nut on the lower part of the mounting bracket. (Torque: 8 N·m (6 lbf·ft))

Mounting Position

Danger
Ensure the specifications for the intrinsically safe structure of this product meet the requirements for installation in hazardous locations. Specifications for the intrinsically safe structure of this product are described in the "Specifications" section.

Caution
Installation of the sensor body below the measured device is prohibited. Due to the characteristics of the battery, doing so may significantly reduce the battery life of the sensor. Make sure the sensor body is above or level with the measured device.

Vertical Position

Horizontal Position

Prohibited Position

Replacing the Battery Pack

Danger

DO NOT disassemble the battery pack. Failure to observe this precaution could result in leakage of the battery fluid, excessive heat generation, rupture or ignition.

Aluminum is used in this product. Do not expose the product to impact or friction. Exposure to impact or friction may result in ignition or accidental explosions.

Do not wipe/rub the surfaces of this product with a dry cloth etc. There is the danger of electrostatically charging the unit, which may result in ignition or explosions, especially in hazardous locations.

The battery pack can be replaced in hazardous locations, but the battery (cell) cannot be replaced regardless of the location.

Caution

Make sure to use a new battery pack when replacing the battery pack. (If replaced with a partially used battery, erroneous results may be returned when calculating the remaining battery life.)

When replacing the battery pack, please use the IS-SU battery replacement kit.

Make sure to use the special tool (sold separately) to open/close the IS sensor cover.

Select a belt wrench with a belt width of 20 mm ($^{13}/_{16}$ in) or less, including 90 mm ($3^{9}/_{16}$ in) in the range of use.

1. Loosen the set screw (c) and remove the sensor cover (d) with a special tool (a, b) provided with the product.
   When the sun shade is attached to the cover, remove it beforehand.

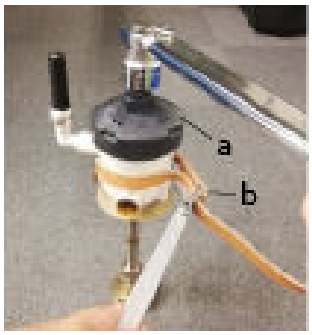

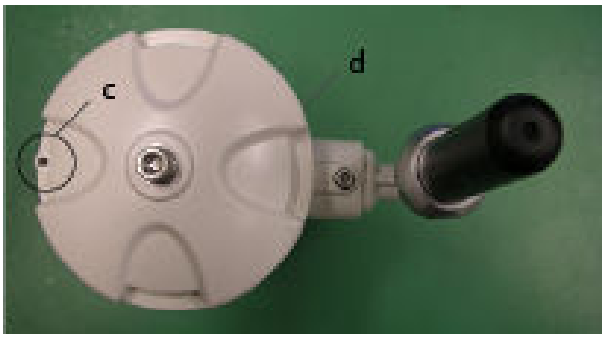

2. Disconnect the connector (e).

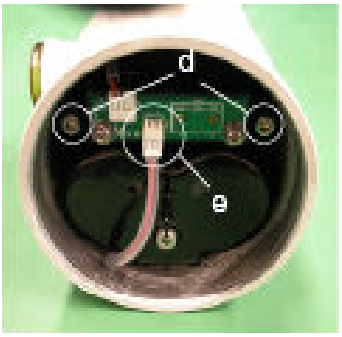

3. Remove two hexagon socket head cap screws (d) and pull the battery pack out.

4. Insert a new battery pack and secure it with two screws.
5. Reconnect the connector.
6. Replace the packing (f) on the sensor cover and coat surfaces with grease.

7. Firmly secure the sensor cover with a special tool shown in Step 1.

Refer to the iT5-IS Battery Replacement Procedure for detailed information including battery disposal methods. Follow local regulations when disposing of used battery packs.

Installing the Sun Shade

Danger

Ensure the specifications for the intrinsically safe structure of this product meet the requirements for installation in hazardous locations. Specifications for the intrinsically safe structure of this product are described in the "Specifications" section.

Aluminum is used in this product. Do not expose the product to impact or friction. Exposure to impact or friction may result in ignition or accidental explosions.

Do not wipe/rub the surfaces of this product with a dry cloth etc. There is the danger of electrostatically charging the unit, which may result in ignition or explosions, especially in hazardous locations.

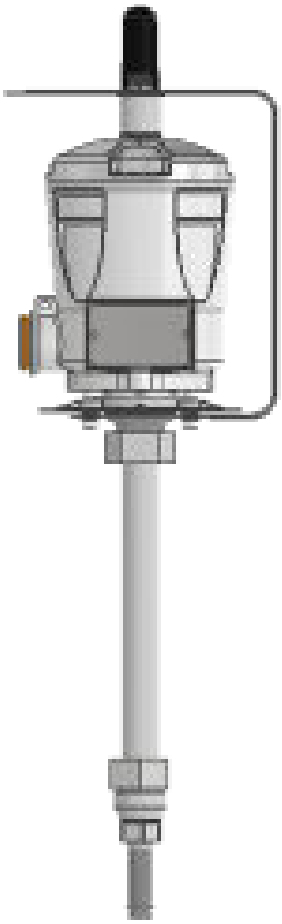

1. Remove the screw on the top of the sensor cover (M6 × 10, 1 pc) and heat-shield fixing screw (M4 × 8, 3 pcs).

2. Temporarily fix the heat shield to the sensor with the included heat-shield fixing screws (M4 × 12, 3 pcs).

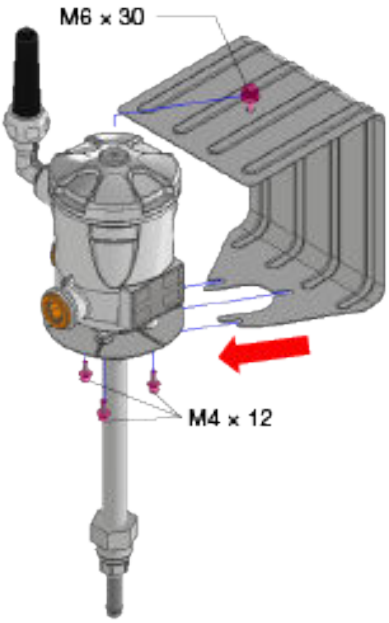

3. Place the sun shade as shown in the following figure at an angle of 30 (A) and tighten all the screws.

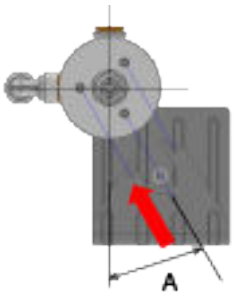

Note

- Do not remove the spacer installed between the sun shade (B) and the sensor.

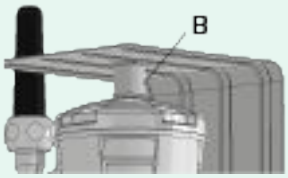

- The sun shade should be inserted between the heat-shield fixing screw washers and the heat-shield (C).

Tightening torques

Part Name		Torque	
		N·m	lbf·ft
Sun shade cover screw	M6 × 30, 1 pc	5.2	3.8
Heat-shield fixing screw	M4 × 12, 3 pcs	0.75	0.55

Confirm the direction of sunlight at the installation site, and install the sun shade so that the sensor unit is covered.

Installing the Antenna Extension

1. Fix the antenna bracket (a) packaged with the product to the structure (b) with a U bolt. The bracket can be installed on either vertical, horizontal or diagonal structures.

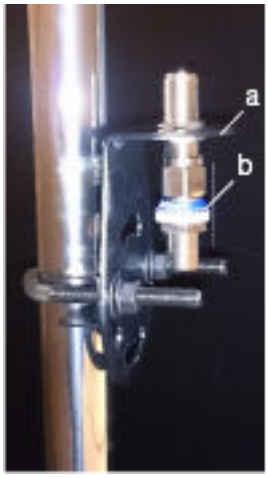

2. Connect the antenna extension (c) and the antenna extension cable (d) packaged with the product.

Calibration

Although this product is thoroughly inspected before shipping, periodic calibration is recommended according to the installation environment to ensure the quality of measurement.

Frequency: Annual inspection is recommended. However, requirements may vary depending on the installation environment, therefore inspection guidelines should be set by the purchaser

Calibration can only be performed with special equipment at TLV's factory. Contact your local TLV representative or your regional TLV office for details.

Specifications

Type	**iTrapSensor Monitoring System – Sensor Unit**
Model	**iT5-IS-SUN**
Classification Markings of Hazardous Locations	**ATEX** CE2776 Ex II 1 G Ex ia IIC T4 Ga (Certificate No.: CML 16ATEX2360X) **IECEx** Ex ia IIC T4 Ga (Certificate No.: IECEx CML 16.0131) **UKEX** Ex ia IIC T4 Ga (Certificate No.: CML 22UKEX2145X)
Applicable Standards	**ATEX/UKEX:** • EN 60079-11:2012 • EN IEC 60079-0:2018 **IECEx:** • IEC 60079-11:2011, Edition 6 • IEC 60079-0:2017, Edition 7
Nameplate	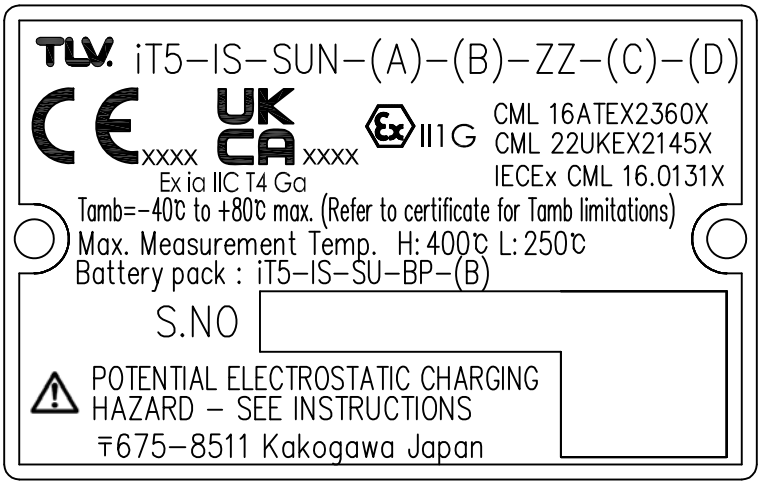

Mark for Certified Electrical Equipment	**Ex**	—
Type of Protection	**ia**	Intrinsically safe structure (can be used in especially hazardous locations)
Optical Radiation	**Op is**	Inherently safe optical radiation (IEC/EN 60079-28:2015)
Applicable Gas Groups	**IIC**	Applicable to gases (Hydrogen, Acetylene, etc.) with minimum ignition current ratio is less than 0.45.
Temperature Class	**T4**	Applicable when maximum surface temperature of the unit is 130 °C (266 °F) and gas ignition temperature is 135 °C (275 °F) or more.
EPL (Equipment Protection Level)	**Ga**	This equipment can be used in Zone 0.

<table>
<tr><td>Power Source</td><td>Battery Pack
Lithium thionyl chloride battery
Rated Voltage: 3.6 V
Rated Capacity: 38 Ah</td></tr>
<tr><td>Enclosure</td><td>IP67 (Evaluation for intrinsic safety rating is carried out under IP20)</td></tr>
<tr><td>Maximum Measurement Temperature</td><td>iT5-IS-SUN-L-**-**-S-**: 250 °C (482 °F)
iT5-IS-SUN-H-**-**-S-**: 400 °C (752 °F)</td></tr>
<tr><td>Ambient Temperature Range</td><td>If the measurement temperature exceeds 135 °C (275 °F), the maximum permissible equipment ambient temperature is reduced as follows.
iT5-IS-SUN-L-**-**-S-**
<table>
<tr><th rowspan="2">Measurement temp. TM</th><th colspan="2">Max. permissible ambient temp.</th></tr>
<tr><th>Vertical mounting</th><th>Horizontal mounting</th></tr>
<tr><td>-40 °C ≤ Tm < 135 °C
(-40 °F ≤ Tm < 275 °F)</td><td>80 °C
(176 °F)</td><td>80 °C
(176 °F)</td></tr>
<tr><td>135°C ≤ Tm < 200 °C
(392 °F ≤ Tm < 482 °F)</td><td>75 °C
(167 °F)</td><td>77 °C
(170 °F)</td></tr>
<tr><td>200 °C ≤ Tm ≤ 250 °C
(392 °F ≤ Tm ≤ 482 °F)</td><td>67 °C
(152 °F)</td><td>75 °C
(167 °F)</td></tr>
</table>
iT5-IS-SUN-H-**-**-S-**
<table>
<tr><th rowspan="2">Measurement temp. TM</th><th colspan="2">Max. permissible ambient temp.</th></tr>
<tr><th>Vertical mounting</th><th>Horizontal mounting</th></tr>
<tr><td>-40 °C ≤ Tm < 135 °C
(-40 °F ≤ Tm < 275 °F)</td><td>80 °C
(176 °F)</td><td>80 °C
(176 °F)</td></tr>
<tr><td>135°C ≤ Tm < 200 °C
(392 °F ≤ Tm < 482 °F)</td><td>75 °C
(167 °F)</td><td>77 °C
(170 °F)</td></tr>
<tr><td>200 °C ≤ Tm < 300 °C
(392 °F ≤ Tm < 572 °F)</td><td>67 °C
(152 °F)</td><td>75 °C
(167 °F)</td></tr>
<tr><td>300 °C ≤ Tm ≤ 400 °C
(572 °F ≤ Tm ≤ 752 °F)</td><td>62 °C
(143 °F)</td><td>72 °C
(161 °F)</td></tr>
</table></td></tr>
<tr><td rowspan="2">Wireless Module</td><td>TELEC: 018-160089
FCC ID: H3RTISS1001
IC: 7221A-TSS1001</td></tr>
<tr><td>Frequency Band: 2.405 GHz to 2.480 GHz
RF Power Output: 7 mW/MHz
Transmitting Range: Approximately 400 m (437 yd) (line of sight)</td></tr>
<tr><td>Material</td><td>Sensor body/Sensor cover: Aluminum alloy die castings (ADC3, SG100A)
Tip Section: Stainless Steel
Heat Shield Plate: Heat-resistant Resin (Polyetheretherketone (PEEK))</td></tr>
</table>

Dimensions (Unit: mm (in))	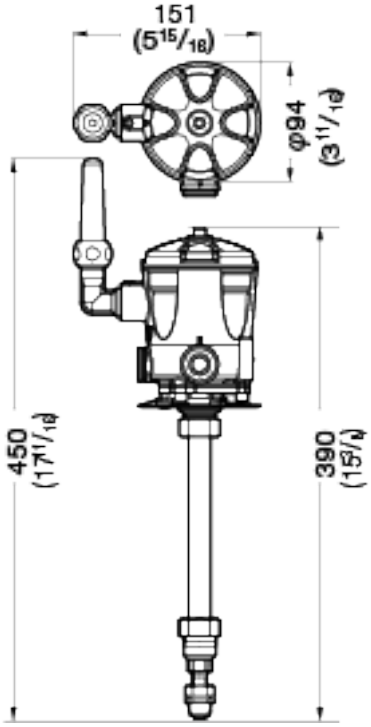
Weight	Approx. 1.45 g (3.2 lb) (including battery pack)

Option

Antenna Extension (Unit: mm (in))	iT5-IS-SUN-**-**-**-*-AS: 3 m (9.8 ft) cable type iT5-IS-SUN-**-**-**-*-AL: 13 m (42.7 ft) cable type 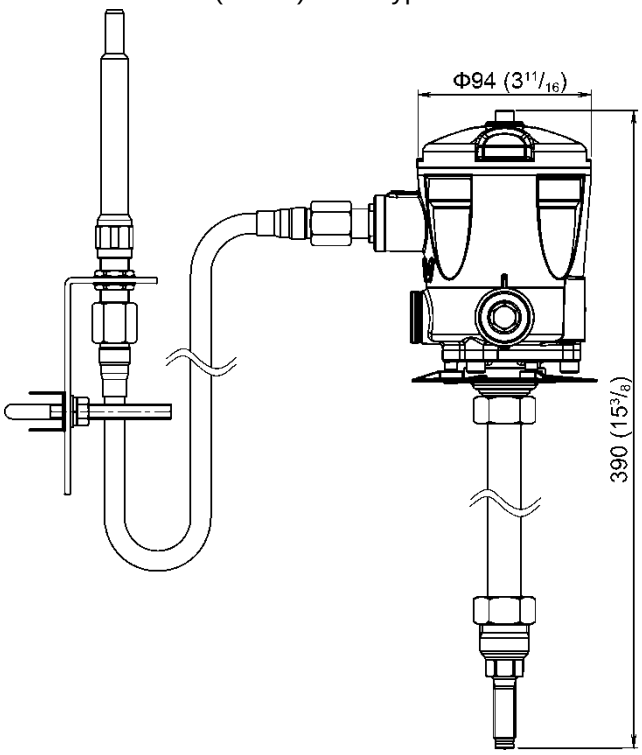 With sun shade 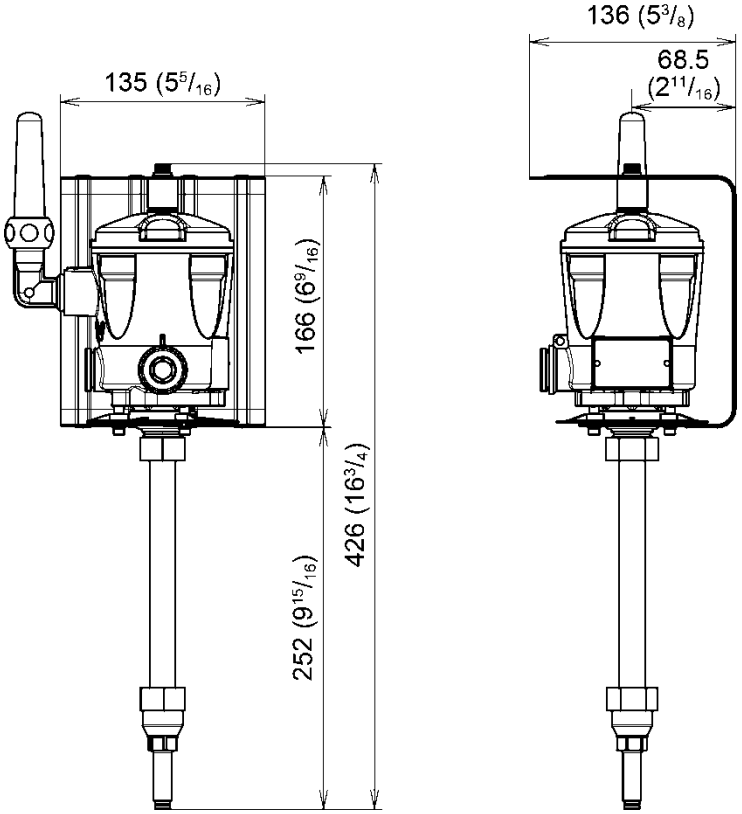
Weight	Approx. 1.85 kg (4.1 lb) (including sun shade)

FCC and IC Statement

This device complies with Part 15 of the Federal Communications Commission (FCC) rules and Industry Canada (IC) RSS-210. Operation is subject to the following two conditions:

1. this device may not cause harmful interference, and
2. this device must accept any interference received, including interference that may cause undesired operation.

Ce dispositif est conforme à la norme RSS 210 d'Industrie Canada. L'utilisation de ce dispositif est autorisée seulement aux conditions suivantes :

1. il ne doit pas produire de brouillage et
2. l'utilisateur du dispositif doit être prêt à accepter tout brouillage radioélectrique reçu, même si ce brouillage est susceptible de compromettre le fonctionnement du dispositif.

TLV EXPRESS LIMITED WARRANTY

Subject to the limitations set forth below, TLV CO., LTD., a Japanese corporation ("**TLV**"), warrants that products which are sold by it, TLV International Inc. ("**TII**") or one of its group companies excluding TLV Corporation (a corporation of the United States of America), (hereinafter the "**Products**") are designed and manufactured by TLV, conform to the specifications published by TLV for the corresponding part numbers (the "**Specifications**") and are free from defective workmanship and materials. The party from whom the Products were purchased shall be known hereinafter as the "**Seller**". With regard to products or components manufactured by unrelated third parties (the "**Components**"), TLV provides no warranty other than the warranty from the third party manufacturer(s), if any.

Exceptions to Warranty

This warranty does not cover defects or failures caused by:

1. improper shipping, installation, use, handling, etc., by persons other than TLV, TII or TLV group company personnel, or service representatives authorized by TLV; or
2. dirt, scale or rust, etc.; or
3. improper disassembly and reassembly, or inadequate inspection and maintenance by persons other than TLV or TLV group company personnel, or service representatives authorized by TLV; or
4. disasters or forces of nature or Acts of God; or
5. abuse, abnormal use, accidents or any other cause beyond the control of TLV, TII or TLV group companies; or
6. improper storage, maintenance or repair; or
7. operation of the Products not in accordance with instructions issued with the Products or with accepted industry practices; or
8. use for a purpose or in a manner for which the Products were not intended; or
9. use of the Products in a manner inconsistent with the Specifications; or
10. use of the Products with Hazardous Fluids (fluids other than steam, air, water, nitrogen, carbon dioxide and inert gases (helium, neon, argon, krypton, xenon and radon)); or
11. failure to follow the instructions contained in the TLV Instruction Manual for the Product.

Duration of Warranty

This warranty is effective for a period of one (1) year after delivery of Products to the first end user. Notwithstanding the foregoing, asserting a claim under this warranty must be brought within three (3) years after the date of delivery to the initial buyer if not sold initially to the first end user.

ANY IMPLIED WARRANTIES NOT NEGATED HEREBY WHICH MAY ARISE BY OPERATION OF LAW, INCLUDING THE IMPLIED WARRANTIES OF MERCHANTABILITY AND FITNESS FOR A PARTICULAR PURPOSE AND ANY EXPRESS WARRANTIES NOT NEGATED HEREBY, ARE GIVEN SOLELY TO THE INITIAL BUYER AND ARE LIMITED IN DURATION TO ONE (1) YEAR FROM THE DATE OF SHIPMENT BY THE SELLER.

Exclusive Remedy

THE EXCLUSIVE REMEDY UNDER THIS WARRANTY, UNDER ANY EXPRESS WARRANTY OR UNDER ANY IMPLIED WARRANTIES NOT NEGATED HEREBY (INCLUDING THE IMPLIED WARRANTIES OF MERCHANTABILITY AND FITNESS FOR A PARTICULAR PURPOSE), IS **REPLACEMENT**; PROVIDED: (a) THE CLAIMED DEFECT IS

REPORTED TO THE SELLER IN WRITING WITHIN THE WARRANTY PERIOD, INCLUDING A DETAILED WRITTEN DESCRIPTION OF THE CLAIMED DEFECT AND HOW AND WHEN THE CLAIMED DEFECTIVE PRODUCT WAS USED; AND (b) THE CLAIMED DEFECTIVE PRODUCT AND A COPY OF THE PURCHASE INVOICE IS RETURNED TO THE SELLER, FREIGHT AND TRANSPORTATION COSTS PREPAID, UNDER A RETURN MATERIAL AUTHORIZATION AND TRACKING NUMBER ISSUED BY THE SELLER. ALL LABOR COSTS, SHIPPING COSTS, AND TRANSPORTATION COSTS ASSOCIATED WITH THE RETURN OR REPLACEMENT OF THE CLAIMED DEFECTIVE PRODUCT ARE SOLELY THE RESPONSIBILITY OF BUYER OR THE FIRST END USER. THE SELLER RESERVES THE RIGHT TO INSPECT ON THE FIRST END USER'S SITE ANY PRODUCTS CLAIMED TO BE DEFECTIVE BEFORE ISSUING A RETURN MATERIAL AUTHORIZATION. SHOULD SUCH INSPECTION REVEAL, IN THE SELLER'S REASONABLE DISCRETION, THAT THE CLAIMED DEFECT IS NOT COVERED BY THIS WARRANTY, THE PARTY ASSERTING THIS WARRANTY SHALL PAY THE SELLER FOR THE TIME AND EXPENSES RELATED TO SUCH ON-SITE INSPECTION.

Exclusion of Consequential and Incidental Damages

IT IS SPECIFICALLY ACKNOWLEDGED THAT THIS WARRANTY, ANY OTHER EXPRESS WARRANTY NOT NEGATED HEREBY, AND ANY IMPLIED WARRANTY NOT NEGATED HEREBY, INCLUDING THE IMPLIED WARRANTIES OF MERCHANTABILITY AND FITNESS FOR A PARTICULAR PURPOSE, DO NOT COVER, AND NEITHER TLV, TII NOR ITS TLV GROUP COMPANIES WILL IN ANY EVENT BE LIABLE FOR, INCIDENTAL OR CONSEQUENTIAL DAMAGES, INCLUDING, BUT NOT LIMITED TO LOST PROFITS, THE COST OF DISASSEMBLY AND SHIPMENT OF THE DEFECTIVE PRODUCT, INJURY TO OTHER PROPERTY, DAMAGE TO BUYER'S OR THE FIRST END USER'S PRODUCT, DAMAGE TO BUYER'S OR THE FIRST END USER'S PROCESSES, LOSS OF USE, OR OTHER COMMERCIAL LOSSES. WHERE, DUE TO OPERATION OF LAW, CONSEQUENTIAL AND INCIDENTAL DAMAGES UNDER THIS WARRANTY, UNDER ANY OTHER EXPRESS WARRANTY NOT NEGATED HEREBY OR UNDER ANY IMPLIED WARRANTY NOT NEGATED HEREBY (INCLUDING THE IMPLIED WARRANTIES OF MERCHANTABILITY AND FITNESS FOR A PARTICULAR PURPOSE) CANNOT BE EXCLUDED, SUCH DAMAGES ARE EXPRESSLY LIMITED IN AMOUNT TO THE PURCHASE PRICE OF THE DEFECTIVE PRODUCT. THIS EXCLUSION OF CONSEQUENTIAL AND INCIDENTAL DAMAGES, AND THE PROVISION OF THIS WARRANTY LIMITING REMEDIES HEREUNDER TO REPLACEMENT, ARE INDEPENDENT PROVISIONS, AND ANY DETERMINATION THAT THE LIMITATION OF REMEDIES FAILS OF ITS ESSENTIAL PURPOSE OR ANY OTHER DETERMINATION THAT EITHER OF THE ABOVE REMEDIES IS UNENFORCEABLE, SHALL NOT BE CONSTRUED TO MAKE THE OTHER PROVISIONS UNENFORCEABLE.

Exclusion of Other Warranties

THIS WARRANTY IS IN LIEU OF ALL OTHER WARRANTIES, EXPRESS OR IMPLIED, AND ALL OTHER WARRANTIES, INCLUDING BUT NOT LIMITED TO THE IMPLIED WARRANTIES OF MERCHANTABILITY AND FITNESS FOR A PARTICULAR PURPOSE, ARE EXPRESSLY DISCLAIMED.

Severability

Any provision of this warranty which is invalid, prohibited or unenforceable in any jurisdiction shall, as to such jurisdiction, be ineffective to the extent of such invalidity, prohibition or unenforceability without invalidating the remaining provisions hereof, and any such invalidity, prohibition or unenforceability in any such jurisdiction shall not invalidate or render unenforceable such provision in any other jurisdiction.

Service

For Service or Technical Assistance: Contact your TLV representative or your regional TLV office.

In Europe:

TLV. EURO ENGINEERING GmbH
Daimler-Benz-Straße 16-18, 74915 Waibstadt, **Germany**
Tel: [49]-(0)7263-9150-0

TLV. EURO ENGINEERING UK LTD.
Units 7 & 8, Furlong Business Park, Bishops Cleeve, Gloucestershire GL52 8TW, **U.K.**
Tel: [44]-(0)1242-227223

TLV. EURO ENGINEERING FRANCE SARL
Parc d'Ariane 2, bât. C, 290 rue Ferdinand Perrier, 69800 Saint Priest, **France**
Tel: [33]-(0)4-72482222
Fax: [33]-(0)4-72482220

In North America:

TLV. CORPORATION
13901 South Lakes Drive, Charlotte, NC 28273-6790, **U.S.A.**
Tel: [1]-704-597-9070
Fax: [1]-704-583-1610

TLV. ENGINEERING S. A. DE C. V.
Av. Jesús del Monte 39-B-1001, Col. Hda. de las Palmas, Huixquilucan, Edo. de México, 52763, **Mexico**
Tel: [52]-55-5359-7949
Fax: [52]-55-5359-7585

In Oceania:

TLV. PTY LIMITED
Unit 8, 137-145 Rooks Road, Nunawading, Victoria 3131, **Australia**
Tel: [61]-(0)3-9873 5610
Fax: [61]-(0)3-9873 5010

In East Asia:

TLV. PTE LTD
36 Kaki Bukit Place, #02-01/02, **Singapore** 416214
Tel: [65]-6747 4600
Fax: [65]-6742 0345

TLV. SHANGHAI CO., LTD.
5/F, Building 7, No.103 Caobao Road, Xuhui District, Shanghai, **China** 200233
Tel: [86]-(0)21-6482-8622
Fax: [86]-(0)21-6482-8623

TLV. ENGINEERING SDN. BHD.
No.16, Jalan MJ14, Taman Industri Meranti Jaya, 47120 Puchong, Selangor, **Malaysia**
Tel: [60]-3-8052-2928
Fax: [60]-3-8051-0899

TLV. PRIVATE LIMITED
252/94 (K-L) 17th Floor, Muang Thai-Phatra Complex Tower B, Rachadaphisek Road, Huaykwang, Bangkok 10310, **Thailand**
Tel: [66]-2-693-3799
Fax: [66]-2-693-3979

TLV. INC.
#302-1 Bundang Technopark B, 723 Pangyo-ro, Bundang, Seongnam, Gyeonggi, 13511, **Korea**
Tel: [82]-(0)31-726-2105
Fax: [82]-(0)31-726-2195

In the Middle East:

TLV. ENGINEERING FZCO
Building 9W, B163, PO Box 371684, Dubai Airport Free Zone, Dubai, **UAE**
Email: sales-me@tlv.co.jp

In Other Countries:

TLV. INTERNATIONAL, INC.
881 Nagasuna, Noguchi, Kakogawa, Hyogo 675-8511, **Japan**
Tel: [81]-(0)79-427-1818
Fax: [81]-(0)79-425-1167

Manufacturer:

TLV. CO., LTD.
881 Nagasuna, Noguchi, Kakogawa, Hyogo 675-8511, **Japan**
Tel: [81]-(0)79-427-1800
Fax: [81]-(0)79-422-2277